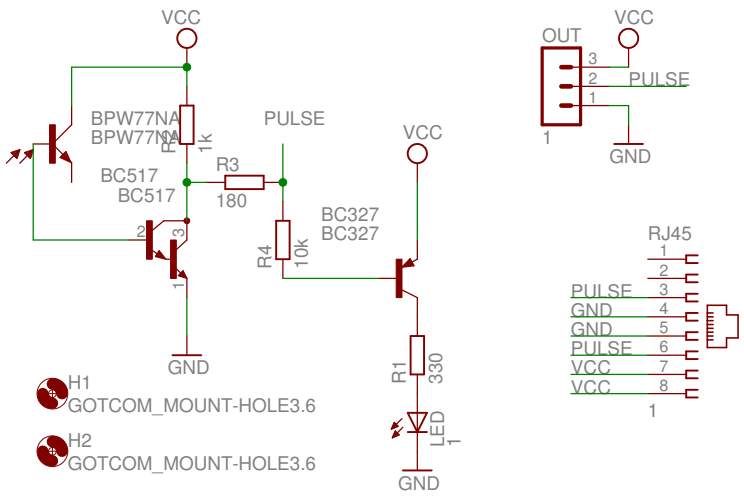

Version: 5	
elmatare	
2014-03-24 15.39	
Sheet: 1/1	